Splice and Junction Connector Details

– Circuit D46

Reference Voltage for ECM Sensors

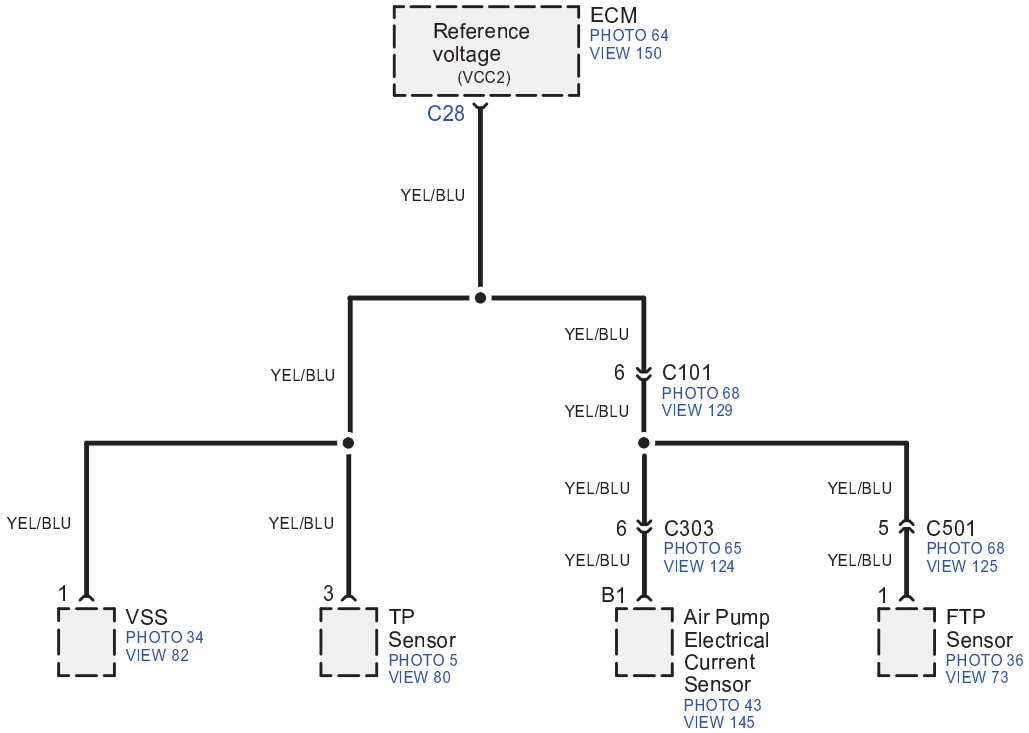

©2005 American Honda Motor Co., Inc.